EXXEL PACIFIC
GENERAL CONTRACTORS

Request For Information - 037

The Cora Apartments (19 W Harrison)

DATE: 08/25/2016

To:	**John Whitlow**	**From**	**Jola Bielecki**
	VIA Architecture 1809 7th Avenue, Suite 800 Seattle, WA 98101		The Cora Apartments (19 W Harrison) 19 W Harrison Seattle, WA 98109
Phone:	206-995-8872	**Phone:**	425-502-1573
Fax:		**Fax:**	360-671-7616
Email:	jwhitlow@via-architecture.com	**Email:**	JolaB@exxelpacific.com
CC:	pneilsen@via-architecture.com		

Subject:	**Tub & Shower Installation Details Clarification**	**Status:**	**Open**

Drawing #: A0901 **Spec Sect #:**

Addendum: **Submittal #:**

Potential Schedule &/or Cost Impacts:

Schedule Impact (days):
Cost Impact:

Information Requested: **Date Required: 08/30/2016**

Please clarify the following questions regarding a tub and shower stall installation from our plumbing subcontractor:

1. Drawing 3/A0901 & 4/A0901 (type A & B bathrooms) shows the tub controls at 2'-0" AFF. The top of the tub (at the tub surround) is at 17". The tub control faceplate is 7" dia., which leaves only 3 ½" for the tub spout. The installer suggests moving the controls from 2'-0" to 2'-9". Please confirm this is acceptable.

2. No details are shown for the shower stall valve controls or the grab bar location on sheet A0901. Please provide the interior elevations with dimensions.

3. Drawing 4/A0901 shows the shower heads located at 80" AFF. The top of the tub enclosure is at 79 ¼" AFF. The top of the shower stall enclosure is at 77 ¾". Since it's so close, could the shower head be moved up to 84" AFF? Please confirm that's acceptable. (type A bathrooms will have hand shower with hose).

4. Please verify the detail at the edge (top and sides) of the tub and shower, and confirm there will be drywall over the nailing flange.

Suggestion:

Requesting Firm: Exxel Pacific, Inc.

Submitted By: *Jola Bielecki*

Response:

Date	Response
	SEE NEXT PAGE FOR VIA RESPONSE

VIA Architects response:

Item #1:
Mount the Controls at 2'-4" height AFF.

Item #2:
Locate shower controls at 3'-8" AFF, centered in control wall. Provide blocking for grab bars per shower stall manufactures recommendations.

Item #3:
Yes, it is acceptable to move shower heads up to 84" AFF.

Item #4:
The GWB return on the shower stall flange will depend on the shower stall selected.
Please provide shops for showers and we can provide detail.
Note: ADA requires no more than 2" between the face of wall and the face of shower.

JXW
8-26-2016

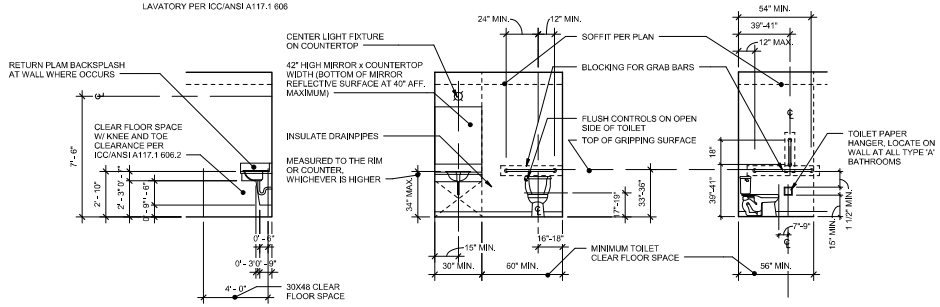

1 TYPICAL ACCESSIBLE BATHROOM FIXTURE LOCATIONS

1/4" = 1'-0"

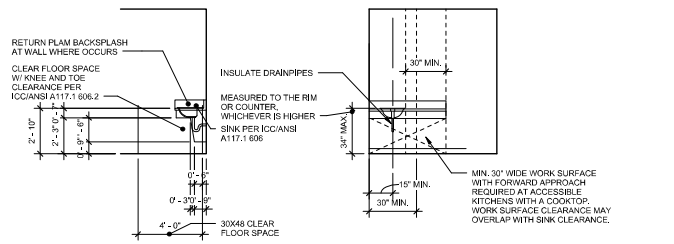

2 TYPICAL ACCESSIBLE KITCHEN FIXTURE LOCATIONS

1/4" = 1'-0"

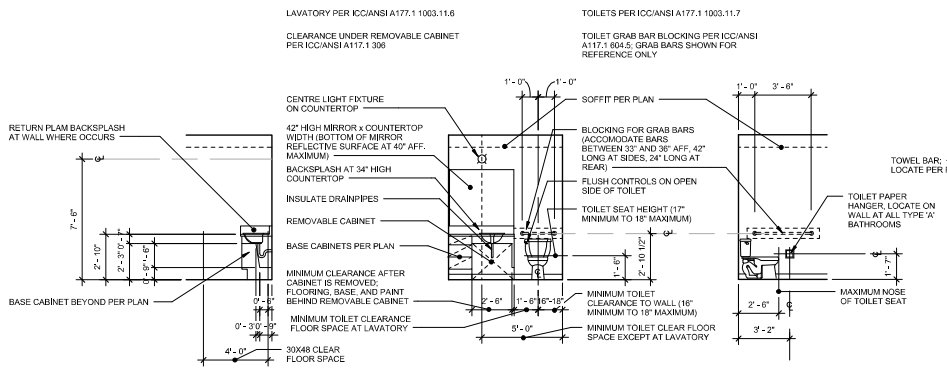

3 TYPICAL TYPE "A" BATHROOM FIXTURE LOCATIONS

1/4" = 1'-0"

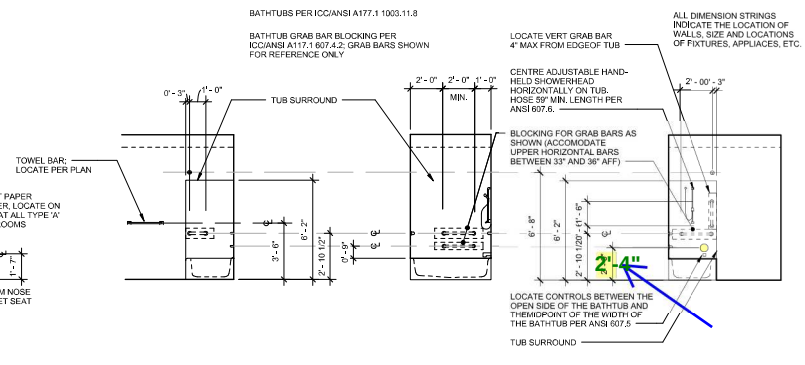

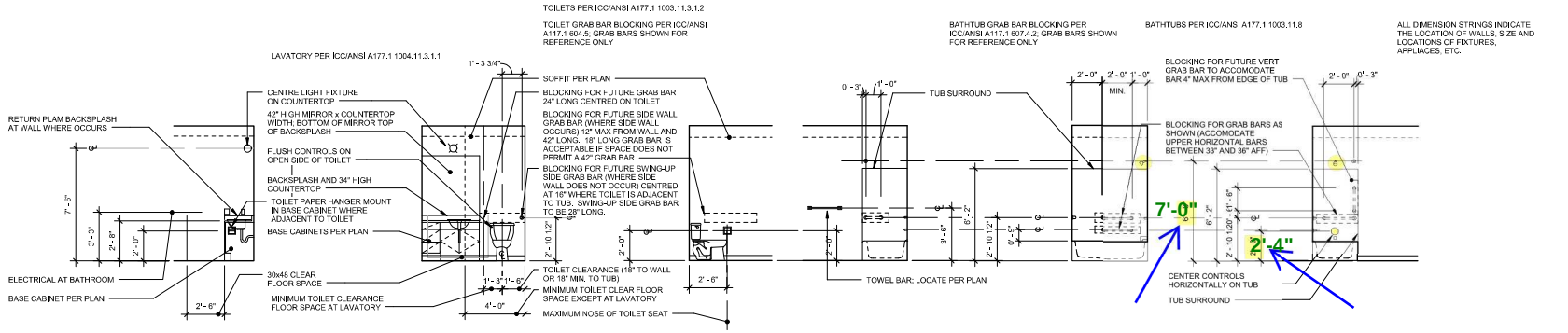

4 TYPICAL TYPE "B" (OPTION A&B) BATHROOM FIXTURE LOCATIONS

1/4" = 1'-0"

VIA Architecture | www.via-architecture.com
1809 7th Avenue Ste. 800 Seattle WA 98101
tel 206 284 5624 fax 206 624 5624

CONSULTANT

PROJECT

19 W Harrison

Seattle, WA 98119
76114

OWNER

19 W Harrison LLC

PROFESSIONAL SEAL

7888 REGISTERED ARCHITECT Alan Hart STATE OF WASHINGTON

DESIGN TEAM

JB

PRINCIPAL

JB

PROJECT MANAGER

PN

PROJECT ARCHITECT

PN

DRAWN BY

SM

CHECKED BY

DRAWING SET DESCRIPTION

ISSUED FOR CONSTRUCTION

REVISIONS

NO.	DATE	DESCRIPTION

SHEET TITLE

ADA BATHROOM FIXTURE LOCATIONS

SHEET NUMBER

A0901

ISSUE DATE

02.12.2016

ALL RIGHTS RESERVED BY VIA ARCHITECTURE INCORPORATED. THIS DESIGN IS NOT TO BE USED OR REPRODUCED WITHOUT THE CONSENT OF VIA ARCHITECTURE INCORPORATED.

DPD STAMP